DALMO®

YX3 系列（IP55）

高效率三相异步电动机

YX3 SERIES(IP55) HIGH-EFFICIENCY 3-PHASE INDUCTION MOTOR

大连达尔马电机有限公司

（原大连第三电机厂）

Dalian Dalmo Electric Motor Co., Ltd.

YX3系列产品概述

YX3系列电机是全封闭自扇冷鼠笼式三相异步电动机，是我公司按照最新国家标准《中小型三相异步电动机能效限定值及能效等级》GB18613－2012要求完全自主设计的高效率电动机，其效率指标达到该标准规定的能效等级的3级，其等同于国际电工委员会的IEC60034－30－2008的IE2高效率指标和欧盟的EFF1标准，即我们的YX3等同于欧美等国的高效率电机。

YX3系列高效率电机具有高效节能，噪音振动低，温升低、过载能力大，以及可靠性能高等特点。安装尺寸和功率等级完全符合IEC和DIN42673等标准。本系列电机采用F级绝缘，温升按B级考核，防护等级IP55，冷却方式为IC411，连续工作制S1，额定电压380V，额定频率50Hz，3kW及以下为“ ”接，4kW及以上为“△”接。为方便用户，接线盒位于机座顶部，亦可左右出线。

YX3系列高效率电机为一般用途的电动机，可驱动无特殊性能要求的各种机械设备等。驱动恒定负载节能效果更好，如风机、水泵、各类机床等。

YX3系列电机效率要比普通系列电机高3%左右，购买高效电机所增加的成本，电机运行大约一年所节省的电能消耗即可补偿，达到节能、减排及环保的目的。

General

Series YX3 electric motor is totally enclosed fan-cooled squirrel-cage three phase asynchronous electric motor, it's a new generation products fully designed by our corporation according updating national standard GB18613-2012《Limited efficiency value and rate for small and medium output electric motor》, aimed at high efficiency and low cost. The efficiency quota equivalent to grade 3 stipulated in this efficiency standard, and also equivalent to IE2 of standard IEC60034-30-2008 by International Electro Commission(IEC) and EFF1 which is applied in the EU.

Series YX3 electric motor can run with great reliability, and characterized such as high efficiency and low power cost, low noise and low vibration, low temperature-rise, and has the ability for overloading, ect. The installation 、dimensions and output grade fully conforms to IEC and DIN42673. YX3 series motor adopts insulation class F, temperature rise B, protection degree IP55, cooling method IC411, the working conditions as S1 (Continous Working Duty). The rated voltage 380V, and rated frequency 50HZ, “⅄”(star) connection method for motors 3.0kW and upward, “△”(Delt) connection for motors 4.0KW and downward. The terminal box locates on top of the frame for the customers' easy installation, and it also can locates on both sides of the motor frame.

Series YX3 electric motor are manufactured for the general purpose, it can drive equipment and machinery tools without special requirement, such like blowers, pumps and tools, etc.

Efficiency of YX3 electric motor is around 3% higher than the general purpose series motor, comparable with the cost of general motor, the increased purchase cost on YX3 high efficiency motor can be compensated from power cost saved by the YX3 motor within only 1 year, and thus can reach the goal of low power consumption, lowest level of pollution.

订购须知：

订货时应注明电机型号、额定电压、额定功率、额定频率，安装结构及冷却方式。

若对电机极数、电压、防护等级、调速特性、绝缘等级、安装尺寸等有特殊要求，订货时请说明，另行商议。

Notice on order

When placing order,please specify the type,output,rated voltage,rated frequency,mounting type and cooling method of the motor.

If you have special request, such as mumber of poles,voltage, speed-regulation,insulation class,degree of the protection,mounting dimensions,etc., it's necessary to specify correctly and consult with us prior order.

YX3系列电动机的结构及安装型式见下表：
Structure and arrangement of series YX3 motor as shown below

机座号 Frame	基本安装结构 Basic Arrangement			派生的安装形式 Derived Arrangement							
	B3	B5	B35	采用B5型		采用B3型				采用B35型	
				V1	V3	V5	V6	B8	B6, B7	V15	V36
YX3 80-160	√	√	√	√	√	√	√	√	√	√	√
YX3 180-225	√	√	√	√	—	—	—	—	—	—	—
YX3 250-280	√	√	√	√	—	—	—	—	—	—	—
YX3 315-355	√	—	√	√	—	—	—	—	—	—	—

安装型式

YX3系列电动机有三种基本结构型式：
B3：机座带底脚，端盖上无凸缘的结构型式；
B5： 机座不带底脚，端盖上带大于机座的凸缘的结构型式；
B35： 机座带底脚，端盖上带大于机座的凸缘的结构型式；

Constructure Arrangement

There are three basic mounting arrangement for series YX3 high efficiency motor:
B3: Frame with feet, end bracket without flange;
B5: : Frame without feet, end bracket with flange whose diameter bigger than the frame;
B35: : Frame with feet, end bracket with flange whose diameter bigger than the frame

型号说明 Types Instruction

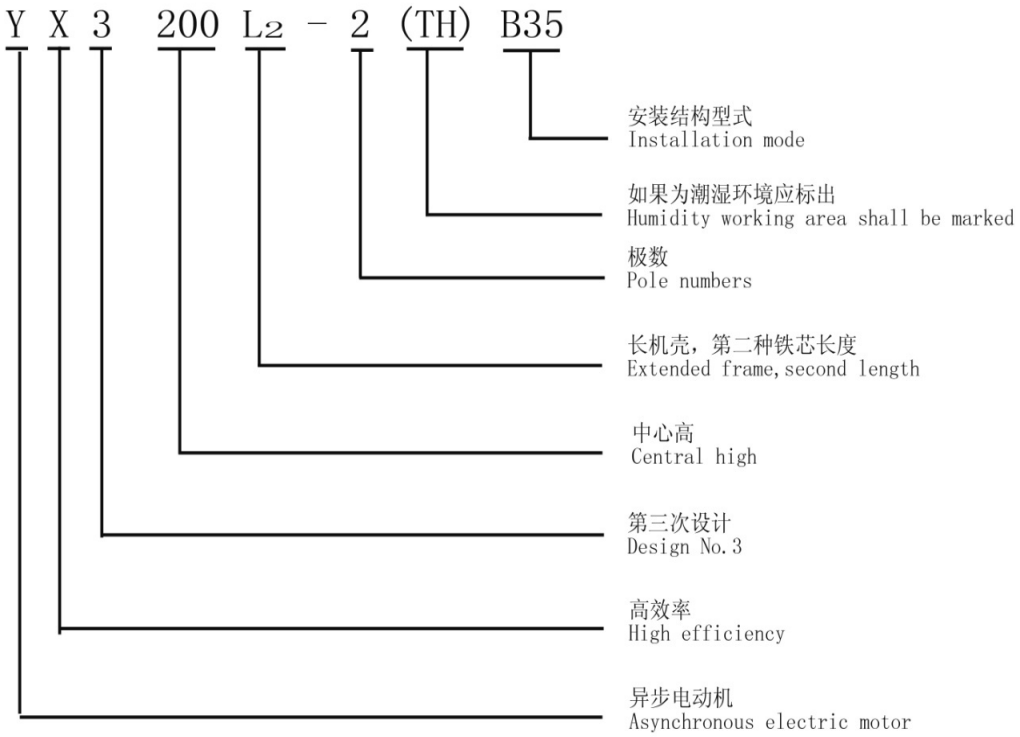

轴承型号 Bearing Types

机座号 Frame	轴伸端 Driving End		非轴伸端 Non-driving end	
	2 极 Pole	4、6、8、10 极 Pole	2 极 Pole	4、6、8、10 极 Pole
80	6204-2RZ		6204-2RZ	
90	6205-2RZ		6205-2RZ	
100	6206-2RZ		6206-2RZ	
112	6206-2RZ		6206-2RZ	
132	6208-2RZ		6208-2RZ	
160	6209-2RZ	6309-2RZ	6209-2RZ	
180	6211C3	6311C3	6211C3	
200	6212C3	6312C3	6212C3	
225	6312C3	6313C3	6312C3	
250	6313C3	6314C3	6313C3	
280	6314C3	6317C3	6314C3	
315	6317C3	NU319C3	6317C3	6319C3
355	6319C3	NU322C3	6319C3	

噪声等级 Noise Level

空载时A计权声功率级的噪声数值

中心高 Central high (mm)	同步转速 Synchronous speed (r/min)				
	3000	1500	1000	750	600
	声功率级/dB（A）				
80	62	56	—	—	—
90	67	59	57		
100	74	64	61	59	
112	77	65	65	61	
132	79	71	69	64	
160	81	73	70	68	
180	83	76	73	70	
200	84	76	73	73	72
225	86	78	74	73	76
250	89	79	76	75	78
280	91	80	78	76	80
315	92	88	83	82	82
355	100	95	85	90	90

负载噪声数值的增值

中心高 Central high (mm)	同步转速 Synchronous speed (r/min)				
	3000	1500	1000	750	600
	声功率级/dB（A）				
80≤H≤160	2	5	7	6	—
180≤H≤200	2	4	6	6	6
225≤H≤280	2	3	5	5	6
H=315	2	3	5	5	5
H=355	2	2	4	5	5

YX3系列高效电机技术数据
Series YX3 motor technical value and data

2极，同步转速3000 r/min
2 Pole, synchronous speed 3000 r/min

型 号 Type	额定功率 Rated output kW	满载时 Full Load				堵转电流/额定电流 Locked current/Rated current	堵转转矩/额定转矩 Locked torque/Rated torque	最大转矩/额定转矩 Max torque/Rated torque	转动惯量 Moment of inertia kg. m^2	电机重量 Weight (kg)
		转速 Speed r/min	电流 Current A	效率 Eff %	功率因数 Power factor cosΦ					
YX3 80M1-2	0.75	2830	1.7	77.4	0.869	6.2	2.2	2.7	0.00750	17
YX3 80M2-2	1.1		2.4	79.6	0.886	6	2.1	2.5	0.00950	18.5
YX3 90S-2	1.5	2855	3.2	81.3	0.865	6.5	2.5	2.8	0.00125	23
YX3 90L-2	2.2	2870	4.6	83.2	0.864	7.4	3	3.4	0.00155	27
YX3 100L-2	3	2880	6.1	84.6	0.888	7.7	3	3.5	0.00300	34
YX3 112M-2	4	2885	7.8	85.8	0.903	6.7	2.1	3.1	0.00550	46
YX3 132S1-2	5.5	2915	10.6	87	0.91	7.5	2.1	3.3	0.01090	57
YX3 132S2-2	7.5		14.1	88.1	0.917	7.4	2.1	3.2	0.01266	62
YX3 160M1-2	11	2930	20.8	89.4	0.897	6.4	1.9	2.9	0.03775	105
YX3 160M2-2	15	2935	27.8	90.3	0.909	7.2	2.1	3.1	0.04500	120
YX3 160L-2	18.5		33.7	90.9	0.917	7.4	2.2	3.2	0.05550	145
YX3 180M-2	22	2945	40.8	91.3	0.898	7	2	3.3	0.07540	182
YX3 200L1-2	30	2950	54	92.1	0.916	7.4	2.1	3.3	0.12420	215
YX3 200L2-2	37		65.8	92.5	0.924	7.5	2.2	3.3	0.13950	250
YX3 225M-2	45	2965	79.7	92.9	0.923	7.7	2.2	3.5	0.23320	300
YX3 250M-2	55		98.6	93.2	0.909	6.9	1.9	3.3	0.31300	420
YX3 280S-2	75	2975	133.2	93.8	0.912	6.6	2.1	3.1	0.59800	500
YX3 280M-2	90		158.8	94.1	0.915	6.7	2.2	3.2	0.67700	550
YX3 315S-2	110	2980	192.2	94.3	0.92	6.7	1.7	3	1.18600	780
YX3 315M-2	132		229.4	94.6	0.924	7.6	2	3.2	1.82300	925
YX3 315L1-2	160		276.6	94.8	0.927	7.5	2	3.2	2.08000	1000
YX3 315L2-2	(185)		319.5	94.9	0.927	8	2.3	3.5	2.40000	1020
YX3 315L3-2	200		344	95	0.93	7.2	2	3.1	2.42000	1120
YX3 355M1-2	(200)		343.2		0.932	7.2	1.6	2.8	2.57000	1110
YX3 355M2-2	(220)		378.5		0.93	7.7	2	3.6	3.14000	1190
YX3 355M3-2	250		430		0.93	8.5	2.3	3.8	3.58000	1330
YX3 355L1-2	(280)		480		0.933	7.6	2	3.5	3.60000	1500
YX3 355L2-2	315		542		0.93	9.1	2.7	4.1	4.19000	1730

注：括号为非标准规格
Note: Types with （） are Non-standard types.

YX3系列高效电机技术数据
Series YX3 motor technical value and data

4极，同步转速1500 r/min
4 Pole, synchronous speed 1500 r/min

型 号 Type	额定功率 Rated output kW	满载时 Full Load				堵转电流/额定电流 Locked current / Rated current	堵转转矩/额定转矩 Locked torque / Rated torque	最大转矩/额定转矩 Max torque / Rated torque	转动惯量 Moment of inertia kg. m^2	电机重量 Weight (kg)
		转速 Speed r/min	电流 Current A	效率 Eff %	功率因数 Power factor cosΦ					
YX3 80M1-4	0.55	1390	1.5	74.0	0.76	4.9	2.5	2.8	0.002	17
YX3 80M2-4	0.75	1400	1.9	79.6		5.4	2.9	3.1	0.002	19.5
YX3 90S-4	1.1	1410	2.6	81.4	0.777	5.5	3	2.9	0.002	24
YX3 90L-4	1.5		3.5	82.8	0.783	6.1	3	2.9	0.003	27
YX3 100L1-4	2.2	1430	4.9	84.3	0.816	6.4	2.7	3.2	0.006	35
YX3 100L2-4	3		6.5	85.5		6.7	2.9	3.3	0.007	40
YX3 112M-4	4	1440	8.6	86.6	0.812	7.2	3.1	3.5	0.010	46
YX3 132S-4	5.5	1450	11.2	87.7	0.853	6.6	2.1	2.9	0.022	60
YX3 132M-4	7.5		14.9	88.7	0.86	7.1	2.3	3	0.030	75
YX3 160M-4	11	1460	21.9	89.8	0.85	6.6	2.1	2.7	0.075	115
YX3 160L-4	15		29.5	90.6	0.853	6.8	2.2	2.7	0.092	140
YX3 180M-4	18.5	1465	35.3	91.2	0.872	6.9	2.1	3	0.139	185
YX3 180L-4	22		41.8	91.6	0.872	7.5	2.3	3.2	0.158	198
YX3 200L-4	30	1470	56.4	92.3	0.876	7.2	2.4	3.1	0.263	235
YX3 225S-4	37	1475	68.3	92.7	0.888	6.9	2.1	2.6	0.407	265
YX3 225M-4	45		82.9	93.1	0.886	7.4	2.3	2.7	0.470	290
YX3 250M-4	55	1480	101.3	93.5	0.882	7.4	2.3	2.9	0.662	430
YX3 280S-4	75	1485	137	94	0.885	7	2.3	2.8	1.123	500
YX3 280M-4	90		163.7	94.2	0.887	7.2	2.5	2.9	1.450	560
YX3 315S-4	110		196	94.5	0.902	6	2	2.6	3.110	770
YX3 315M-4	132		234	94.7	0.905	7.3	2.2	2.9	3.610	880
YX3 315L1-4	160		283	94.9	0.905	7.9	2.5	3.1	4.280	1000
YX3 315L2-4	(185)		326.2	95	0.907	7.8	2.5	3	4.720	1120
YX3 315L3-4	200		339.2	95.1	0.942	7.9	2.6	3.1	5.060	1200
YX3 355M1-4	(200)		343.6		0.93	6.6	1.8	2.8	5.480	1350
YX3 355M2-4	(220)		379.2		0.927	6.7	1.9	2.9	5.760	1440
YX3 355M3-4	250		430		0.929	6.6	1.9	2.8	6.120	1620
YX3 355L1-4	(280)		481		0.932	7.4	2.1	3.1	7.240	1760
YX3 355L2-4	315		541		0.93	7.7	2.3	3.2	7.830	1940

注：括号为非标准规格
Note: Types with （） are Non-standard types.

YX3系列高效电机技术数据
Series YX3 motor technical value and data

6极，同步转速1000 r/min
6 Pole, synchronous speed 1000 r/min

型　号 Type	额定功率 Rated output kW	满载时 Full Load				堵转电流/额定电流 Locked current/Rated current	堵转转矩/额定转矩 Locked torque/Rated torque	最大转矩/额定转矩 Max torque/Rated torque	转动惯量 Moment of inertia kg. m^2	电机重量 Weight (kg)
		转速 Speed r/min	电流 Current A	效率 Eff %	功率因数 Power factor cosΦ					
YX3 90S-6	0.75	915	2.1	75.9	0.725	4.1	2.1	2.7	0.003	24
YX3 90L-6	1.1		2.9	78.1	0.727	4.4	2.4	2.8	0.004	27
YX3 100L-6	1.5	940	3.8	79.8	0.758	5	2.4	2.7	0.007	35
YX3 112M-6	2.2		5.4	81.8	0.761	5.1	2.3	2.7	0.015	46
YX3 132S-6	3	965	7	83.3	0.78	6.3	2.3	3	0.029	50
YX3 132M1-6	4		9.3	84.6	0.778	6.9	2.6	3.2	0.036	60
YX3 132M2-6	5.5		12.5	86	0.78	7.2	2.8	3.3	0.045	75
YX3 160M-6	7.5		16.4	87.2	0.798	5.4	1.9	2.2	0.087	105
YX3 160L-6	11	970	23.6	88.7	0.798	5.9	2.1	2.3	0.117	140
YX3 180L-6	15	975	30.5	89.7	0.832	6	2.2	2.8	0.207	195
YX3 200L1-6	18.5	980	37.5	90.4	0.829	7	2.4	3	0.315	205
YX3 200L2-6	22		43.9	90.9	0.837	6.9	2.4	2.9	0.361	235
YX3 225M-6	30		57.7	91.7	0.862	5.8	1.8	2.2	0.547	290
YX3 250M-6	37		69.4	92.2	0.879	7.4	2.3	3.1	0.834	410
YX3 280S-6	45	985	83.8	92.7	0.88	6.5	2	2.5	1.400	450
YX3 280M-6	55		101.5	93.1	0.884	6.4	2	2.5	1.660	505
YX3 315S-6	75	990	138.7	93.7	0.877	6.6	2	2.7	4.110	750
YX3 315M-6	90		164.7	94	0.883	6.2	1.9	2.5	4.750	820
YX3 315L1-6	110		200.5	94.3	0.884	6.5	2	2.5	5.650	960
YX3 315L2-6	132		239.8	94.6	0.884	6.6	2.1	2.6	6.520	1140
YX3 355M1-6	(132)		236.1	94.7	0.897	7.4	2.1	3.2	8.650	1230
YX3 355M2-6	160		282.7	94.8	0.907	6.5	1.9	2.8	9.110	1490
YX3 355M3-6	(185)		326.9	94.9	0.906	6.6	1.9	2.8	9.570	1630
YX3 355M4-6	200		353	95	0.906	7	2	2.9	9.850	1740
YX3 355L1-6	(220)		388.4		0.906	7.2	2.2	3	10.280	1870
YX3 355L2-6	250		442.3		0.904	7.1	2.1	3	10.930	2000

注：括号为非标准规格
Note: Types with （） are Non-standard types.

YX3系列高效电机技术数据
Series YX3 motor technical value and data

8极，同步转速750 r/min

8 Pole, synchronous speed 750 r/min

型 号 Type	额定功率 Rated output kW	满载时 Full Load				堵转电流/额定电流 Locked current / Rated current	堵转转矩/额定转矩 Locked torque / Rated torque	最大转矩/额定转矩 Max torque / Rated torque	转动惯量 Moment of inertia kg. m^2	电机重量 Weight (kg)
		转速 Speed r/min	电流 Current A	效率 Eff %	功率因数 Power factor cosΦ					
YX3 100L1-8	0.75	680	2.3	71	0.713	3.6	1.9	2.6	0.007	34
YX3 100L2-8	1.1	685	3.2	73	0.708	3.9	2.2	2.8	0.011	38
YX3 112M-8	1.5		4.2	75	0.719	3.7	1.9	2.5	0.015	46
YX3 132S-8	2.2	705	5.7	81	0.73	4.8	2.1	2.8	0.031	55
YX3 132M-8	3		7.5	82	0.75	4.7	2	2.7	0.040	65
YX3 160M1-8	4	715	9.8	84.5	0.737	5.3	2.1	2.8	0.075	90
YX3 160M2-8	5.5		13	86	0.745	5.5	2.1	2.9	0.093	110
YX3 160L-8	7.5		17.4	87	0.754	5.6	2.2	2.8	0.125	140
YX3 180L-8	11	725	24.9	88	0.762	5.8	1.9	2.8	0.203	185
YX3 200L-8	15	730	33.4	89	0.766	6	1.9	2.6	0.339	205
YX3 225S-8	18.5	735	39.1	91	0.789	6.7	1.9	2.6	0.498	260
YX3 225M-8	22		46.4		0.791	6.8	1.9	2.6	0.547	290
YX3 250M-8	30		61.2		0.819	5.4	1.9	2.6	0.835	405
YX3 280S-8	37		75.3	92	0.812	5.7	1.9	2.6	1.400	450
YX3 280M-8	45		90.6		0.82	5.5	1.8	2.4	1.660	515
YX3 315S-8	55	740	109.6	93	0.82	5.6	1.7	2.1	3.790	725
YX3 315M-8	75		148.8	93.5	0.819	6.2	1.9	2.6	5.590	905
YX3 315L1-8	90		176.1	93.8	0.828	5.7	1.8	2.4	6.380	980
YX3 315L2-8	110		215	94	0.827	6	1.9	2.2	7.420	1160
YX3 355M1-8	(110)		206	94.5	0.858	6.1	1.9	2.5	9.870	1230
YX3 355M2-8	132		248.2		0.855	6	1.9	2.4	10.680	1410
YX3 355M3-8	160		301		0.855	6.5	2.2	2.6	12.760	1680
YX3 355L1-8	(185)		348		0.855	6.7	2.3	2.7	14.280	1900
YX3 355L2-8	200		374		0.859	6.2	2.1	2.5	16.800	1990

注：括号为非标准规格

Note: Types with （） are Non-standard types.

YX3系列高效电机技术数据
Series YX3 motor technical value and data

10极，同步转速600r/min
10 Pole, synchronous speed 600 r/min

型　号 Type	额定功率 Rated output kW	满载时 Full Load				堵转电流/额定电流 Locked current / Rated current	堵转转矩/额定转矩 Locked torque / Rated torque	最大转矩/额定转矩 Max torque / Rated torque	转动惯量 Moment of inertia kg. m^2	电机重量 Weight (kg)
		转速 Speed r/min	电流 Current A	效率 Eff %	功率因数 Power factor cosΦ					
YX3 200L-10	11	580	24.9	88	0.764	5.1	1.7	2.5	0.334	190
YX3 225S-10	15	585	32.5	89	0.787	5.5	1.7	2.4	0.488	245
YX3 225M-10	18.5		40	90	0.78	5.7	1.8	2.5	0.542	265
YX3 250M-10	22		48.4		0.768	5.7	1.8	2.5	0.831	390
YX3 280S-10	30	590	65.7	91	0.762	5.7	1.8	2.5	1.34	425
YX3 280M-10	37		80.5		0.767	5.8	1.8	2.5	1.65	515
YX3 315S-10	45		96.3	92	0.772	4.5	1.6	2.2	4.64	740
YX3 315M-10	55		117.4		0.774	4.6	1.6	2.2	5.41	815
YX3 315L1-10	75		158	92.5	0.779	4.8	1.7	2.3	6.88	990
YX3 315L2-10	90		191	93	0.77	5.1	1.9	2.4	7.38	1180
YX3 355M1-10	(90)		180.6	93.5	0.81	5.8	1.6	2.4	12.14	1220
YX3 355M2-10	110		218		0.82	5.2	1.4	2.2	12.55	1370
YX3 355M3-10	132	595	265		0.809	6	1.7	2.5	14.56	1580
YX3 355L-10	160		324.6		0.801	6.5	1.9	2.7	16.07	1900

注：括号为非标准规格
Note: Types with （） are Non-standard types.

注：　1、虽然8、10极电机等不在GB18613－2012规定的范围内，但是为了方便用户节能的目的而进行选择，我们也一并做了提高效率的设计。

2、表中电机重量为计算重量，仅供参考，应以实际称重量为准。

Note: 1、 We also extended our designing specification to motor types 8 poles and 10 poles which are not specified in GB18613-2012, this will make it convenient for the customers choosing high-efficiency motor to save energy.

2、 The weight in the list are only for your reference, in case of authentic and application purpose, the weight should be re-checked and revised on site.

结构与安装尺寸
Structure and overall dimensions

B3（卧式）安装结构及安装尺寸　Horizontal installation and dimensions

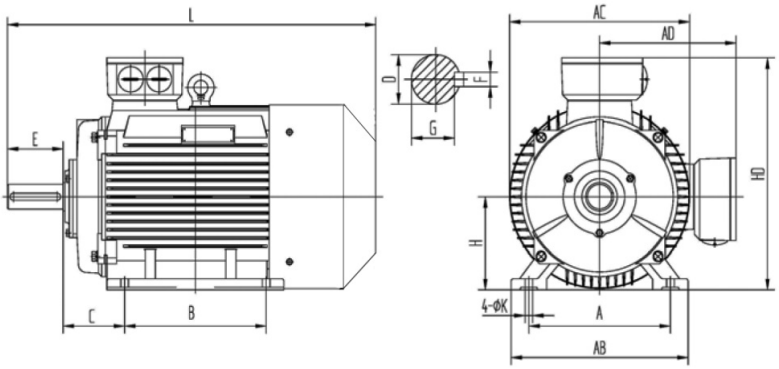

机座号 Frame	极数 Poles	安装尺寸 Installation Dimensions(mm)									外型尺寸 Overall dimensions(mm)				
		A	B	C	D	E	F	G	H	K	AB	AC	AD	HD	L
80M	2～10	125	100	50	19	40	6	15.5	80	10	165	175	145	220	305
90S		140		56	24	50	8	20	90		180	195	165	260	360
90L			125												390
100L		160	140	63	28	60		24	100	12	205	215	180	275	435
112M		190		70					112		230	240	190	300	470
132S		216		89	38	80	10	33	132		270	275	210	345	510
132M			178												560
160M		254	210	108	42	110	12	37	160	14.5	320	330	255	420	670
160L			254												700
180M		279	241	121	48		14	42.5	180		355	380	280	455	740
180L			279												790
200L		318	305	133	55		16	49	200	18.5	395	420	305	505	790
225S	4～10	356	286	149	60	140	18	53	225		435	470	335	560	830
225M	2		311		55	110	16	49							825
	4～10				60	140	18	53							855
250M	2	406	349	168					250	24	490	510	370	615	915
	4～10				65			58							
280S	2	457	368	190					280		550	580	410	680	985
	4～10				75		20	67.5							
280M	2		419		65		18	58							1035
	4～10				75		20	67.5							
315S	2	508	406	216	65	140	18	58	315	28	635	645	530	845	1180
	4～10				80	170	22	71							1290
315M	2		457		65	140	18	58							1210
	4～10				80	170	22	71							1320
315L	2		508		65	140	18	58							1210
	4～10				80	170	22	71							1320
355M	2	610	560	254	75	140	20	67.5	355		730	710	655	1010	1500
	4～10				95	170	25	86							1530
355L	2		630		75	140	20	67.5							1500
	4～10				95	170	25	86							1530

结构与安装尺寸
Structure and overall dimensions

B5（立式）安装结构及尺寸　Vertical installation and dimensions

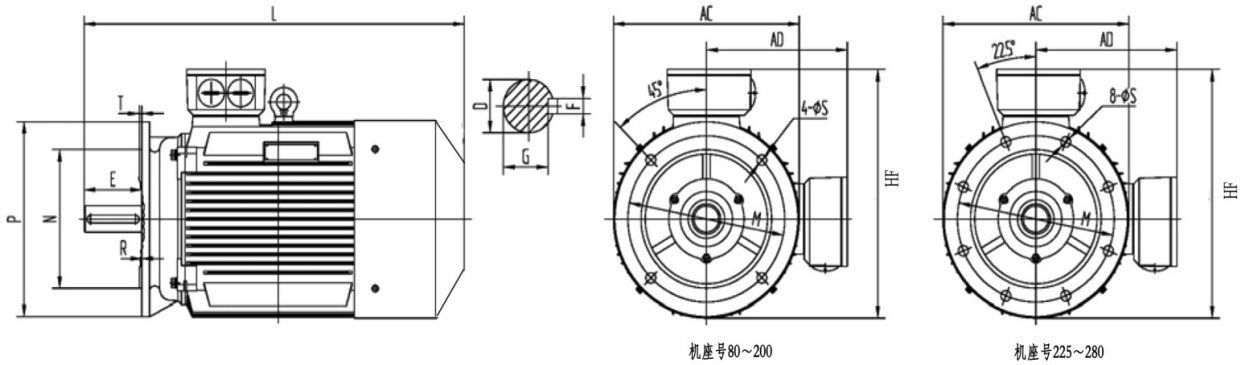

机座号 Frame	极数 Poles	安装尺寸 Installation Dimensions(mm)												外型尺寸 Overall dimensions(mm)			
		D	E	F	G	H	M	N	P	R	S	T	凸缘孔数	AC	AD	HF	L
80M	2～10	19	40	6	15.5	80	165	130	200	0	12	3.5	4	175	145	220	305
90S		24	50	8	20	90								195	165	260	360
90L																	390
100L		28	60		24	100	215	180	250		14.5	4		215	180	270	435
112M						112								240	190	300	470
132S		38	80	10	33	132	265	230	300					275	210	345	510
132M																	560
160M		42	110	12	37	160	300	250	350		18.5	5		330	255	420	670
160L																	700
180M		48		14	42.5	180								380	280	455	740
180L																	790
200L		55		16	49	200	350	300	400					420	305	505	790
225S	4～10	60	140	18	53	225	400	350	450				8	470	335	560	830
225M	2	55	110	16	49												825
	4～10	60	140	18	53												855
250M	2					250	500	450	550					510	370	615	915
	4～10	65			58												
280S	2					280								580	410	680	985
	4～10	75		20	67.5												
280M	2	65		18	58												1035
	4～10	75		20	67.5												

结构与安装尺寸
Structure and overall dimensions

B35（立、卧式）安装结构及尺寸　　Horizontal and vertical installation and dimensions

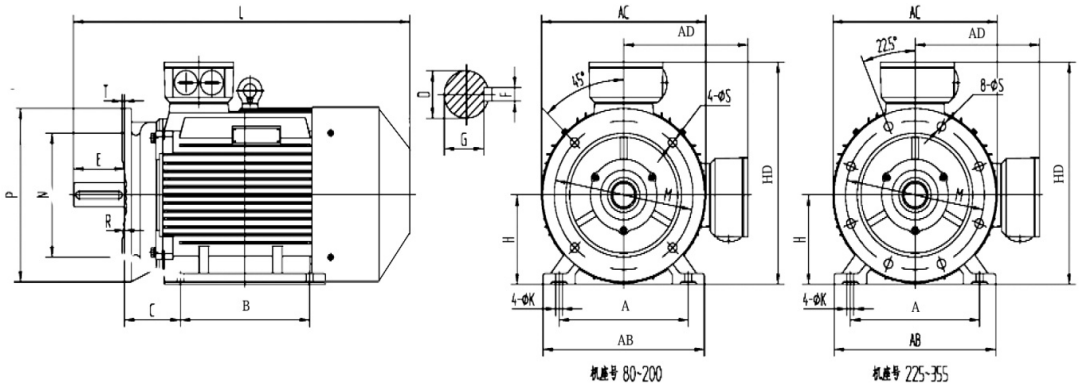

机座号 Frame	极数 Poles	安装尺寸 Installation Dimensions(mm)																外型尺寸 Overall dimensions(mm)				
		A	B	C	D	E	F	G	H	K	M	N	P	R	S	T	凸缘孔数	AB	AC	AD	HD	L
80M	2～10	125	100	50	19	40	6	15.5	80	10	165	130	200	0	12	3.5	4	165	175	145	220	305
90S		140		56	24	50	8	20	90									180	195	165	260	360
90L			125																			390
100L		160	140	63	28	60		24	100	12	215	180	250		14.5	4		205	215	180	270	435
112M		190		70					112									230	240	190	300	470
132S		216		89	38	80	10	33	132		265	230	300					270	275	210	345	510
132M			178																			560
160M		254	210	108	42	110	12	37	160	14.5	300	250	350		18.5	5		320	330	255	420	670
160L			254																			700
180M		279	241	121	48		14	42.5	180									355	380	280	455	740
180L			279																			790
200L		318	305	133	55		16	49	200	18.5	350	300	400					395	420	305	505	790
225S	4～10	356	286	149	60	140	18	53	225		400	350	450				8	435	470	335	560	830
225M	2		311		55	110	16	49														825
	4～10				60	140	18	53														855
250M	2	406	349	168					250	24	500	450	550					490	510	370	615	915
	4～10				65			58														
280S	2	457	368	190					280									550	580	410	680	985
	4～10				75		20	67.5														
280M	2		419		65		18	58														1035
	4～10				75		20	67.5														
315S	2	508	406	216	65	140	18	58	315	28	600	550	660	0	24	6	8	635	645	530	845	1180
	4～10				80	170	22	71														1290
315M	2		457		65	140	18	58														1210
	4～10				80	170	22	71														1320
315L	2		508		65	140	18	58														1210
	4～10				80	170	22	71														1320
355M	2	610	560	254	75	140	20	67.5	355		740	680	800					730	710	655	1010	1500
	4～10				95	170	25	86														1530
355L	2		630		75	140	20	67.5														1500
	4～10				95	170	25	86														1530

结构与安装尺寸
Structure and overall dimensions

V1安装结构及尺寸　V1 vertical installation and dimensions

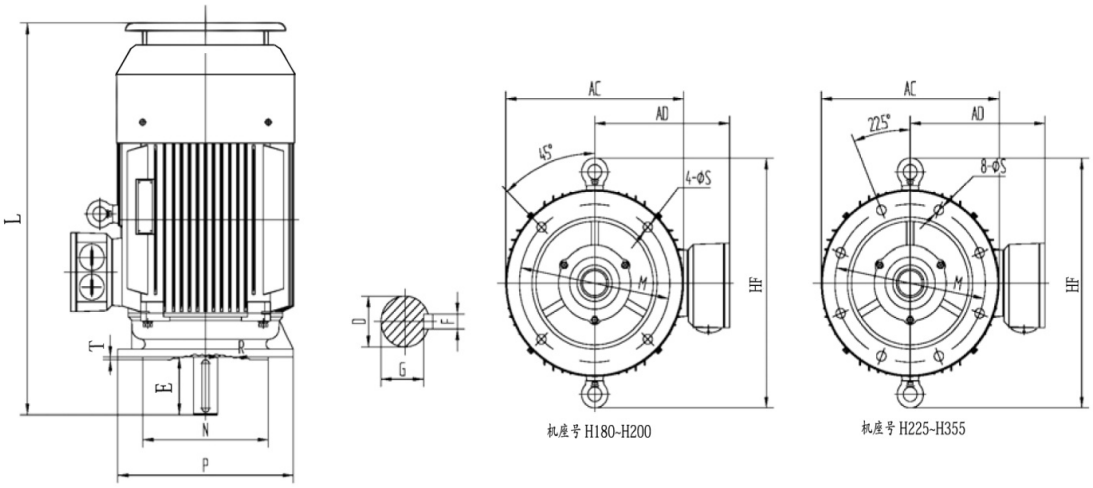

机座号 Frame	极数 Poles	安装尺寸 Installation Dimensions(mm)												外型尺寸 Overall dimensions(mm)			
		D	E	F	G	H	M	N	P	R	S	T	凸缘孔数	AC	AD	HF	L
180M	2～10	48	110	14	42.5	180	300	250	350	0	18.5	5	4	380	280	500	800
180L																	850
200L		55		16	49	200	350	300	400					420	305	550	860
225S	4～10	60	140	18	53	225	400	350	450				8	470	335	610	920
225M	2	55	110	16	49												915
	4～10	60	140	18	53												945
250M	2					250	500	450	550					510	370	650	1020
	4～10	65			58												
280S	2					280								580	410	720	1110
	4～10	75		20	67.5												
280M	2	65		18	58												
	4～10	75		20	67.5												1150
315S	2	65	140	18	58	315	600	550	660	0	24	6	8	645	530	900	1300
	4～10	80	170	22	71												1420
315M	2	65	140	18	58												1330
	4～10	80	170	22	71												1450
315L	2	65	140	18	58												1330
	4～10	80	170	22	71												1450
355M	2	75	140	20	67.5	355	740	680	800					710	655	1010	1640
	4～10	95	170	25	86												1670
355L	2	75	140	20	67.5												1640
	4～10	95	170	25	86												1670